CATEGORY

LIGHTING & ACCESSORIES

AMMO ITEM #

ARYC1

Company: _____

Job: _____ #Item: _____

Notes: _____

Temporary Light Cages

APPLICATIONS

- Can be used on job sites, parking lots & other commercial or industrial locations requiring a temporary light source
- Each socket individually rated up to 150w maximum

MATERIAL

Polypropylene (PP)

AMMO#	WEIGHT (g)	INNER	MASTER	UPC
ARYC1	54	100	1000	837654086216

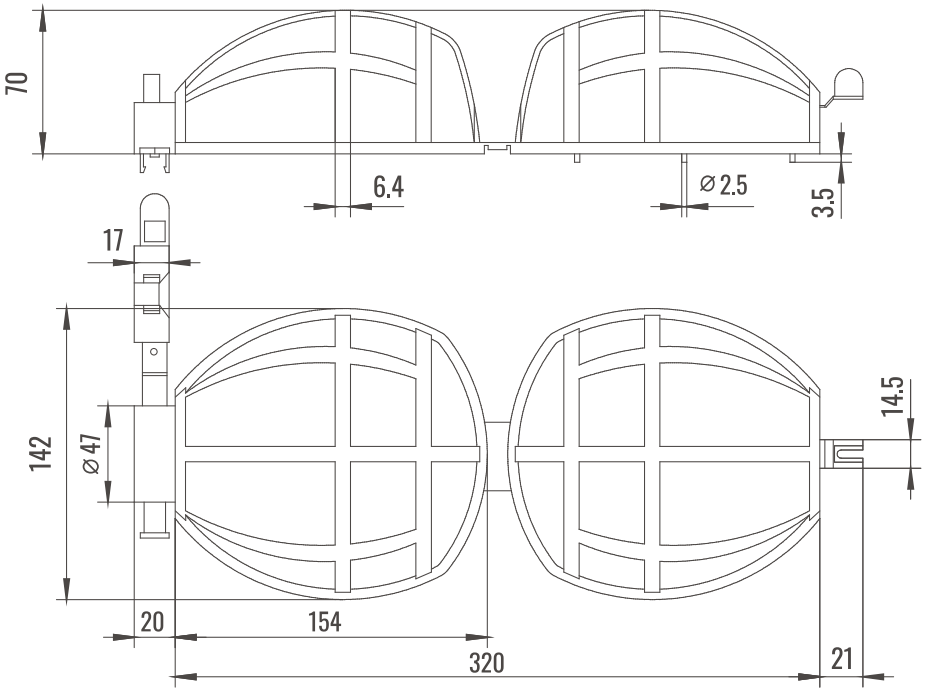

Measurements in **Mm**

LIGHTING &ACCESSORIES

Ammo Electric Inc.

400 MARTIN LUTHER KING JR WAY, BRIDGETON, NJ 08302
PHONE : (718).338.1851 FAX : (718).228.1851
orders@ammoelectric.com

www.ammoelectric.com