CATEGORY

ELECTRICAL BOXES

AMMO ITEM #

AROWBX-150

Company: _____

Job: _____ #Item: _____

Notes: _____

4" Octagon Old Work Box, Drawn
W/MC/BX Clamps & Fixture Ears 3-1/2" O.C

UL LISTED

APPLICATION
Used in the installation of ceiling or wall lighting fixtures

FEATURE
Free of sharp edge and burrs. max burr 0.127

MATERIAL
Galvanized sheet G60

CONFIGURATION
- Deep: _____ 1-1/2 in
- Thickness: _____ 0.0625 invvv
- Cubic Capacity: _____ 14.0 cu. in
- Drawn or Welded: _____ Drawn
- Knockout: _____ One 1/2 in

CERTIFICATION
UL listed

PACKAGING
- Weight: _____ 0.55 lb
- PKG: _____ 5
- UPC number: _____ 840526200191

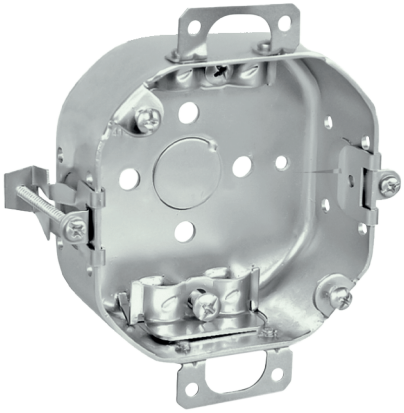

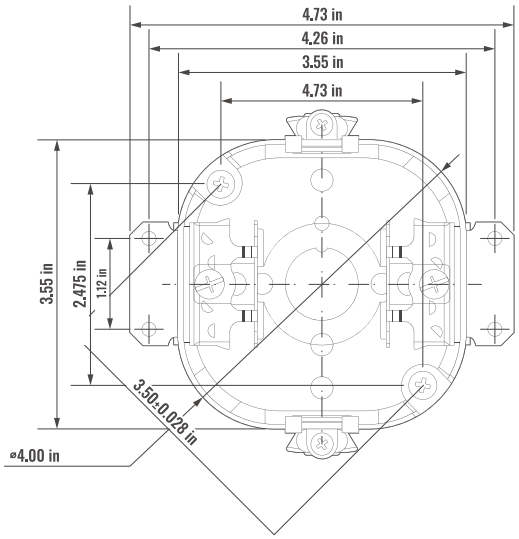

ELECTRICAL BOXES & COVERS

Ammo Electric Inc.

1000 COMMERCE CENTER DR ELKTON MD 21921
PHONE : (718).338.1851 FAX : (718).228.1851
orders@ammoelectric.com

www.ammoelectric.com